CWTe Research Retreat, Oct. 29, 2013

Distributed Beam-forming Gain in Relation to Backbone Communication

Peng ZHANG[1]

and

Frans M.J.Willems[1]

1:Signal Processing Systems (SPS) group, TU/e

TU/e CWTe

Centre for Wireless Technology Eindhoven

Where innovation starts

Future Cellular Access Networks

- **Next generation (4G LTE Advanced and 5G)**
  - High-speed connections: 10Gbit/s per cell and beyond
  - Green transmission: good power efficiency
  - Small-size cells: high density
- **Coordinated Multi-Point (*CoMP*) trans./reception**
  - Cooperated base stations (BSs)
  - Backbone connections, e.g. optic cables
  - Joint processing: coding and decoding
  - Distributed beam-forming: received signal-to-noise ratio (SNR) boost at user-equipment (UE)

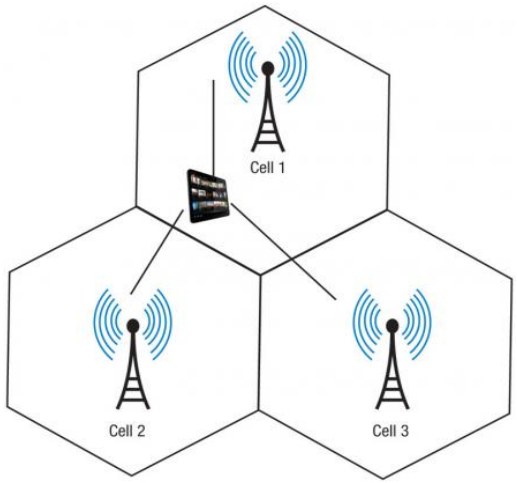

Figure source: rtcmagazine.com

Distributed Beam-forming, Downlink

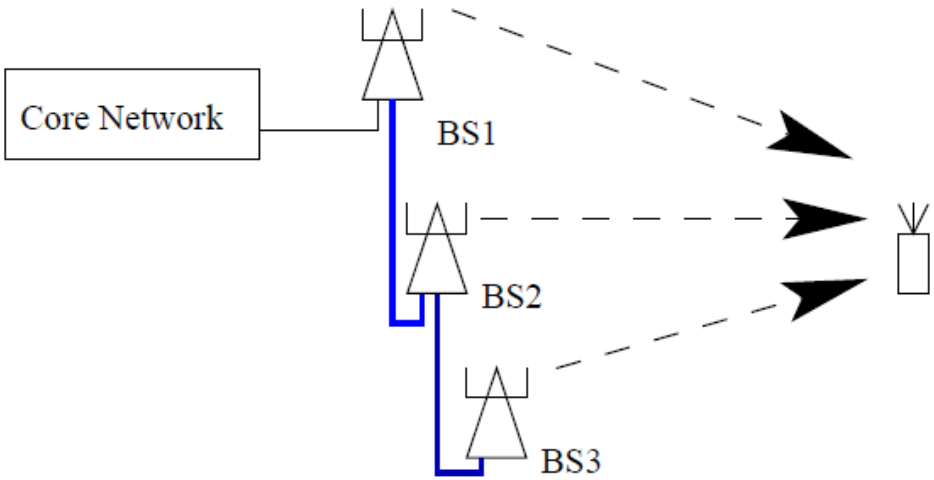

Fig. : Backbone links among adjacent BSs

- Information exchanged via <u>backbone links</u>: sending one common message by BSs simultaneously
- Synchronized BSs: *coherent* signal combining at user terminal to achieve beam-forming gain

Research Questions:

1. How to cooperate among BSs (Best strategy)?
2. How much information needs to be exchanged to achieve certain beam-forming gain?

Example: Two BSs, Gaussian Case

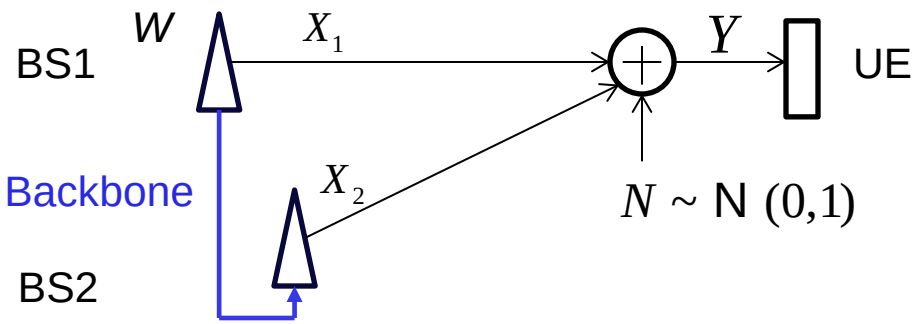

Fig. : Two BSs cooperation in real-valued Gaussian channel

- Sending a message *W* from BS1 to UE; BS2 is helping (cooperating)
- Gaussian noise and Gaussian trans. signals
- Total trans. power *P*:
  $E[X_1^2] + E[X_2^2] \leq P$

- No cooperation (BS2 is not used):
  - Capacity: $C = \frac{1}{2}\log(1+P)$; backbone capacity[1]: $C_t = 0$
- Total cooperation (BS2 knows entire *W*):
  - P is equally split: $E[X_1^2] = \frac{P}{2}$ and $E[X_2^2] = \frac{P}{2}$; $X_1 = X_2 = X$
  - $Y = X_1 + X_2 + N = 2X + N$
  - Beam-forming capacity: $C_B = \frac{1}{2}\log(1+2P)$; backbone capacity: $C_t = C_B$

How about available C_t is less than C_B ??

1: max. info. commun. per channel use

Our Approach

- Information-theoretic investigation:
  - beam-forming capacity C_B V.S. limited total backbone capacity C_t
- Two-user and three-user cases (2 and 3 cooperative BSs)
- Discrete channel → *Gaussian channel*
- Limited total transmit power P at BSs
- Freely distribute limited C_t among backbone links
- Static, no fading, no path loss, single antenna

Two-User (BSs) Case: Multiple-Access Channel (MAC)

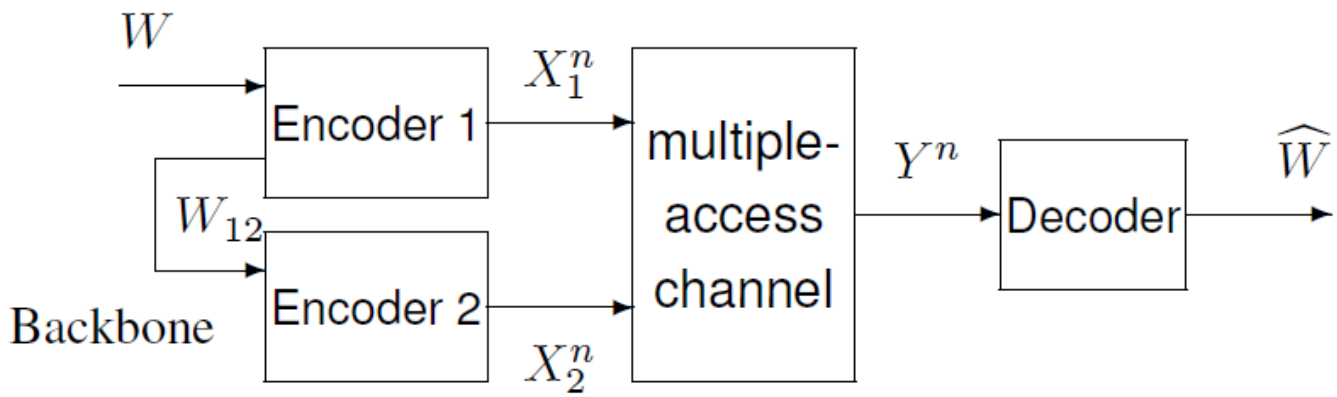

- Cooperating BSs send a single message W by n channel uses
- Encoders (BSs): $W \in [1,2^{nR}]$, uniformly generated, partly shared by $W_{12} \in [1,2^{nR_{12}}]$ via the backbone: $R_{12} \leq C_{12}$ (C_t)
- Memoryless MAC: $(\mathrm{X}_1 \times \mathrm{X}_2, P(y \mid x_1, x_2), \mathrm{Y})$
- Decoder (UE): estimates $\widehat{W}$ based on Y^n; $P_e^{(n)} := \Pr(\widehat{W} \neq W)$

Two-User Gaussian Case: Capacity Result

At the i-th transmission

$$Y_i = X_{1i} + X_{2i} + N_i$$

where $N_i \sim N(0,1)$ is i.i.d., and

$$\frac{1}{n}\sum_{i=1}^{n} x_{1i}^2 \le P_1 \quad and \quad \frac{1}{n}\sum_{i=1}^{n} x_{2i}^2 \le P_2$$

with $P = P_1 + P_2$.

Theorem 1:

For the Gaussian MAC, the beam-forming capacity is

$$C_B(P, C_{12}) = \max_{0 \le \beta \le 1} \min\left\{\frac{1}{2}\log(1 + \beta P + P), \frac{1}{2}\log(1 - \beta P + P) + C_{12}\right\},$$

Two-User Gaussian Case: Numerical Result (C_t vs. C_B)

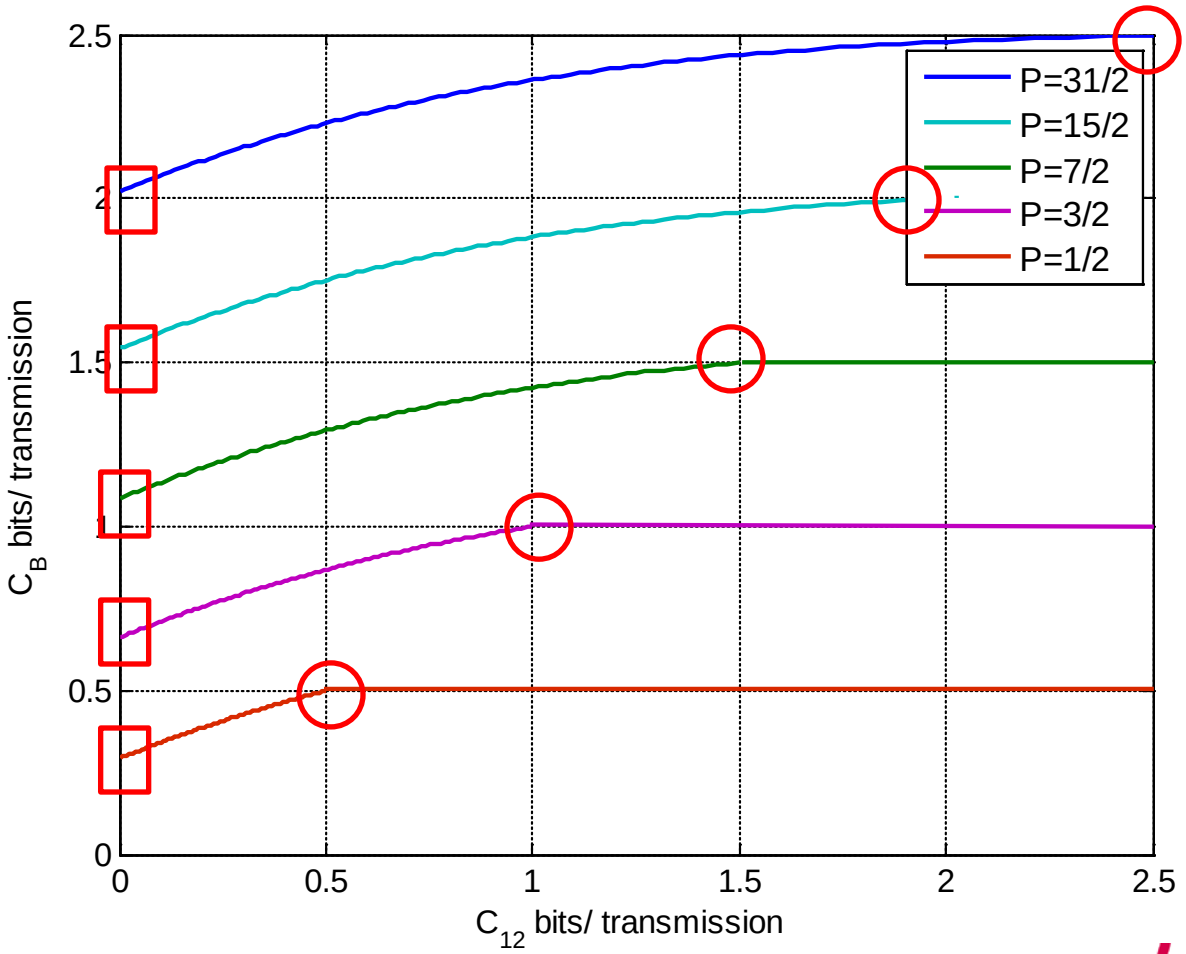

Three-User Case: Channel Model

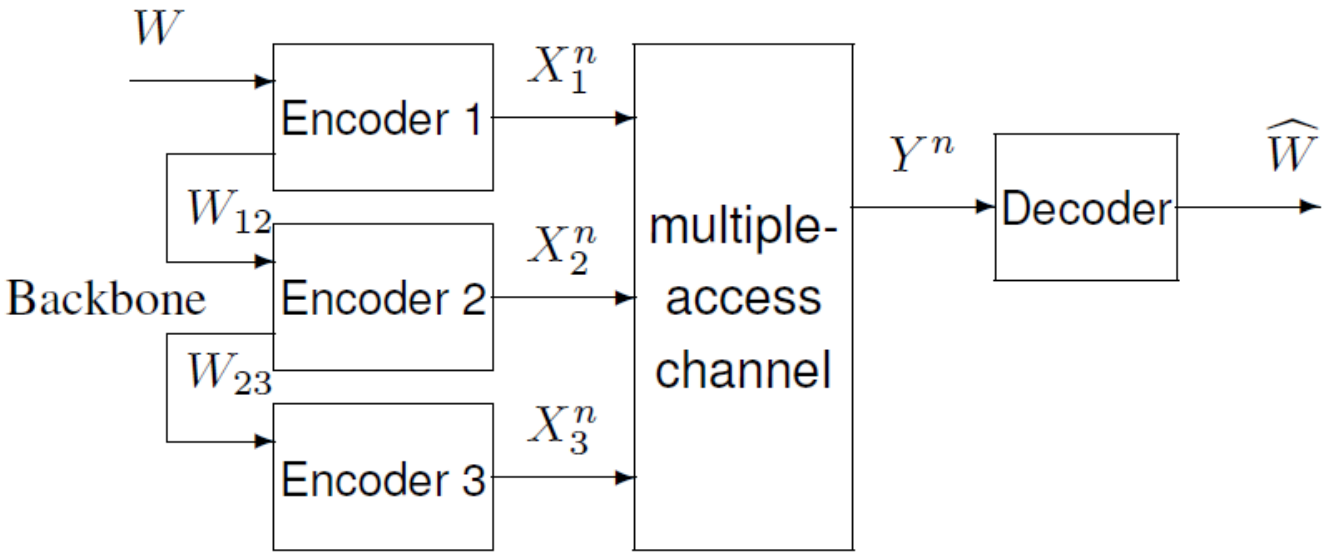

- Encoders: $W \in [1,2^{nR}]$, uniformly generated, partly shared by $W_{12} \in [1,2^{nR_{12}}]$ and $W_{23} \in [1,2^{nR_{23}}]$ via the backbone: $R_{12} \leq C_{12}$ and $R_{23} \leq C_{23}$. Constraint: $C_{12} + C_{23} \leq C_t$.
- Memoryless MAC: $(\mathrm{X}_1 \times \mathrm{X}_2 \times \mathrm{X}_3, P(y \mid x_1, x_2, x_3), \mathrm{Y})$
- Decoder: estimates $\widehat{W}$ based on Y^n; $P_e^{(n)} := \Pr(\widehat{W} \neq W)$

Three-User Gaussian Case: Capacity Result

At the i-th transmission

$$Y_i = X_{1i} + X_{2i} + X_{3i} + N_i$$

where $N_i \sim N(0,1)$ is i.i.d., and

$$\frac{1}{n}\sum_{i=1}^{n} x_{1i}^2 \le P_1,\ \frac{1}{n}\sum_{i=1}^{n} x_{2i}^2 \le P_2,\ \frac{1}{n}\sum_{i=1}^{n} x_{3i}^2 \le P_3 \quad \boxed{\text{with } P = P_1 + P_2 + P_3.}$$

Theorem 2:

For the three-user Gaussian MAC, the beam-forming capacity is

$$C_B(P, C_{12}, C_{23}) = \max_{\underline{\beta}} \min \left\{ \begin{array}{c} \frac{1}{2}\log(1 + \beta_1 P + 2\beta_2 P + 3\beta_3 P), \\ \frac{1}{2}\log(1 + \beta_1 P) + C_{12}, \\ \frac{1}{2}\log(1 + \beta_1 P + 2\beta_2 P) + C_{23} \end{array} \right\},$$

With $\underline{\beta} = (\beta_1, \beta_2, \beta_3)^T$, $\sum_{m=1}^{3} \beta_m = 1$.

Three-User Gaussian Case: Numerical Result (C_t vs. C_B)

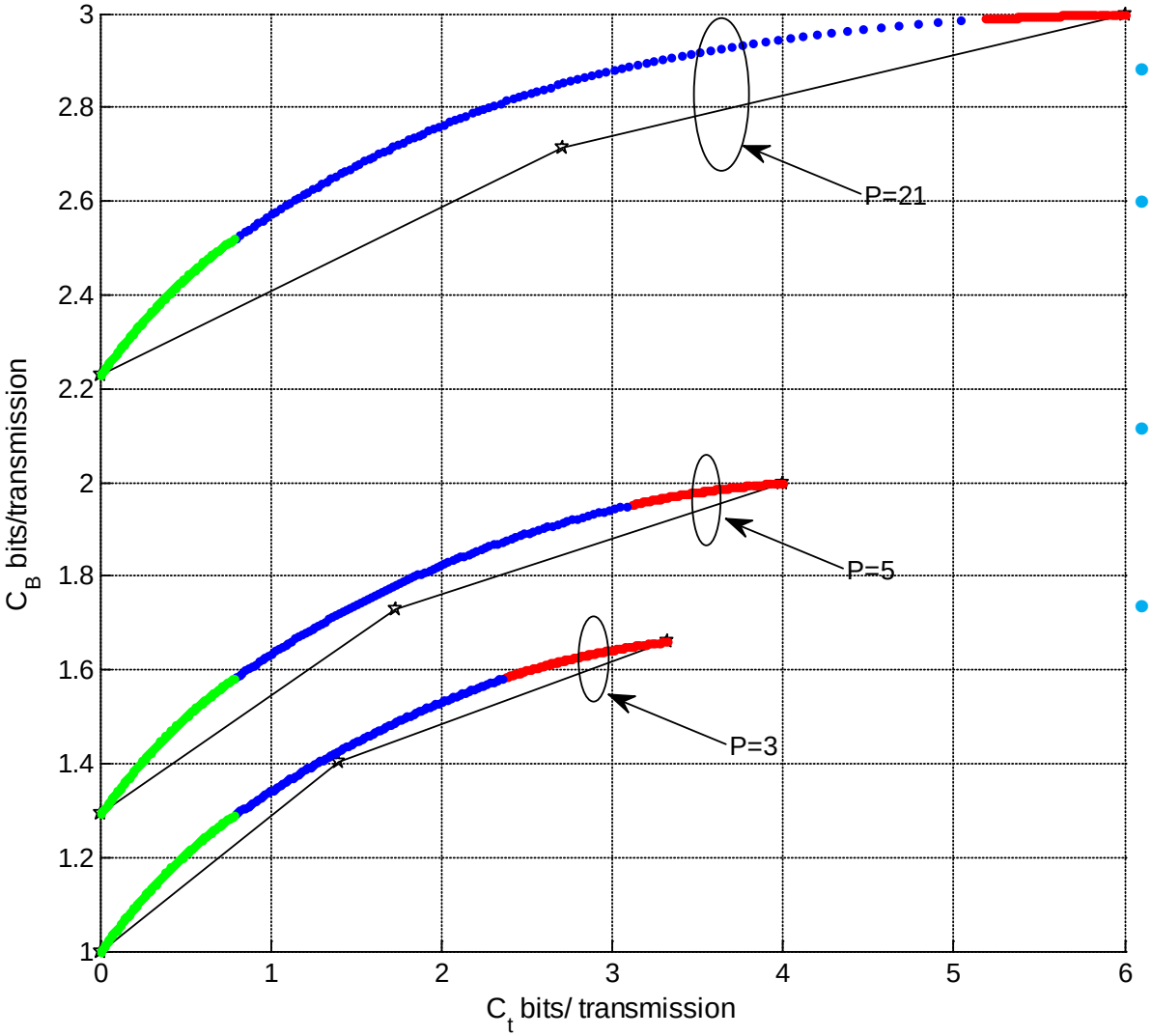

- Starting point: $C_B = \frac{1}{2}\log(1+P)$ no cooperation: mode 1
- Total cooperation (mode 3):

$$C_B = \frac{1}{2}\log(1+3P)$$
$$C_t = 2C_B$$

- ☆: total cooperation between BS1 and BS2, and BS3 is not used
- Black curve: time sharing

Water-Filling-Like Strategy

- Optimal distribution of available backbone capacity

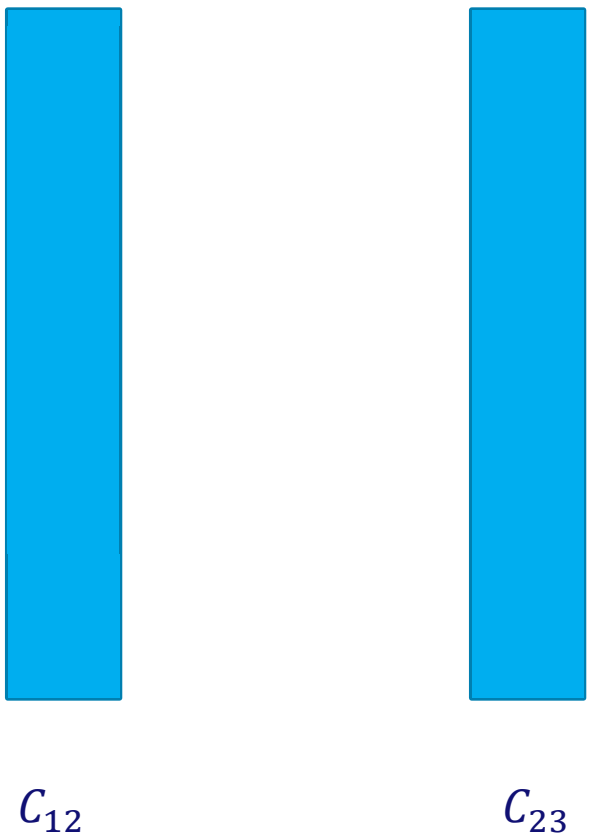

Conclusions and Future work

- **Conclusions:**
  - Investigated the distributed beam-forming gain in relation to the limited backbone capacity
  - Studied power constrained partially cooperating MAC with two-user and three-user cases
  - Achieved the optimal cooperation strategy among BSs, distribution of total power and total backbone capacity:

    water-filling-like method

- **Future Work**
  - Consider the path loss
  - Consider the multi-antenna case

Thanks for your attention